BLAUPUNKT

BRIDGEABLE QUADRO STEREO AMPLIFIER

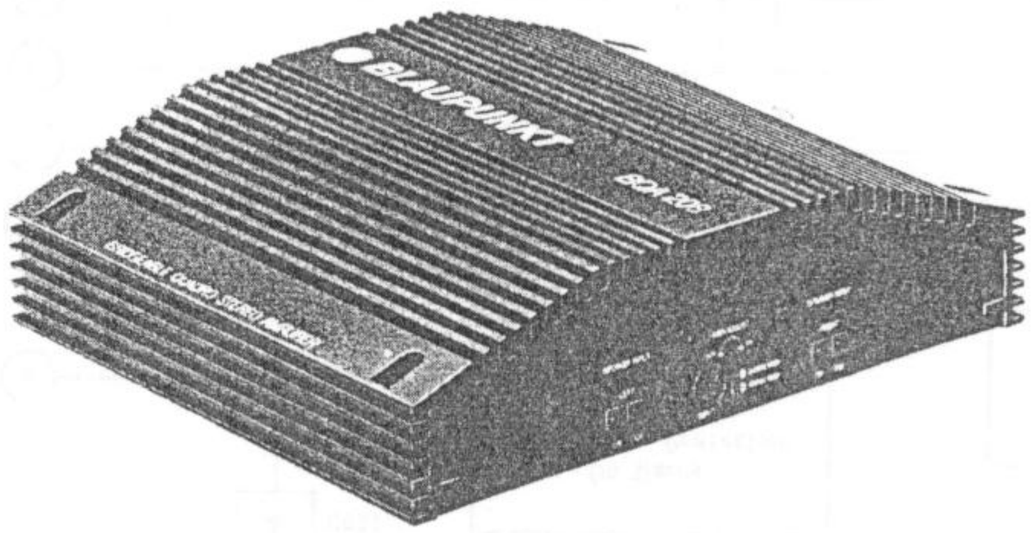

BQA 208

7 607 579 010

Kundendienstschrift
Service Manual
Manuel de service
Manual de servicio

Su. 12. 88 (D) (GB) (F) (E) BP/VKD 3 D88 440 002

Technische Daten	Technical Data	Données techniques	Datos técnicos	
Betriebsspannung: Stromaufnahme:	Supply voltage: Power consumption:	Tension d'alimentation: Consommation:	Potencia de salida: Consumo:	12 V (Service 14 V) I_{min} 1.3 A I_{max} 30 A
Übertragungsbereich:	Transmission range:	Bande passante:	Gama de transmisión:	3 Hz – 100 kHz – 3 dB
Nennleistung: Quadro	Nominal power: Quadro	Puissance nominale: Quadro	Potencia nominal: Quadro	4 x 50 W (4 Ω)
Nennleistung: Stereo	Nominal power: Stereo	Puissance nominale: Stéréo	Potencia nominal: Estereo	2 x 100 W (4 Ω)
Lautsprecherausgang:	Speaker output:	Sortie H-P:	Salida de altavoz:	4 Ω je Kanal
Übersprechdämpfung:	Crosstalk attenuation:	Diaphonie:	Diafonia:	60 dB
Klirrfaktor:	Distortion:	Distorsion:	Distorsión:	0.04 % (0.5 W/1 kHz)
Gain ADJUST (R 730, R 740, R 750, R 760) Regler zum Anpassen des Amplifier Eingangs an die Autoradio-Ausgangsspannung.	Gain ADJUST (R 730, R 740, R 750, R 760) to adjust the Amplifier input to the output voltage of the car radio.	Gain ADJUST (R 730, R 740, R 750, R 760) pour adapter l'entrée Amplifier à la tension de sortie de l'autoradio.	Gain ADJUST (R 730, R 740, R 750, R 760) Regulador para adaptar la entrada de Amplifier a la tensión de salida del autorradio.	0,3 V – 2 V

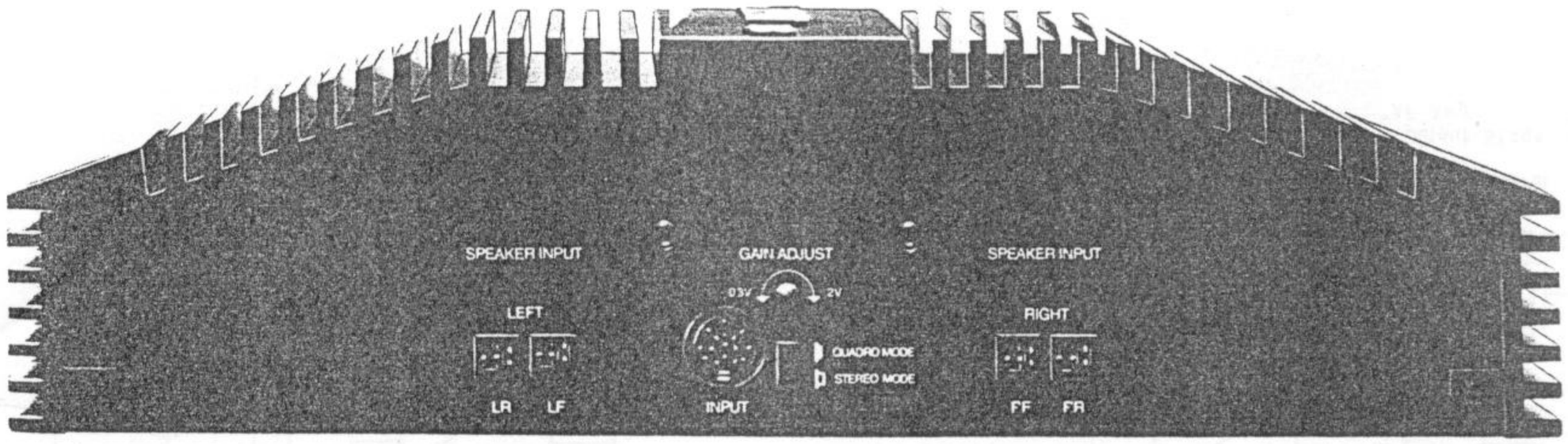

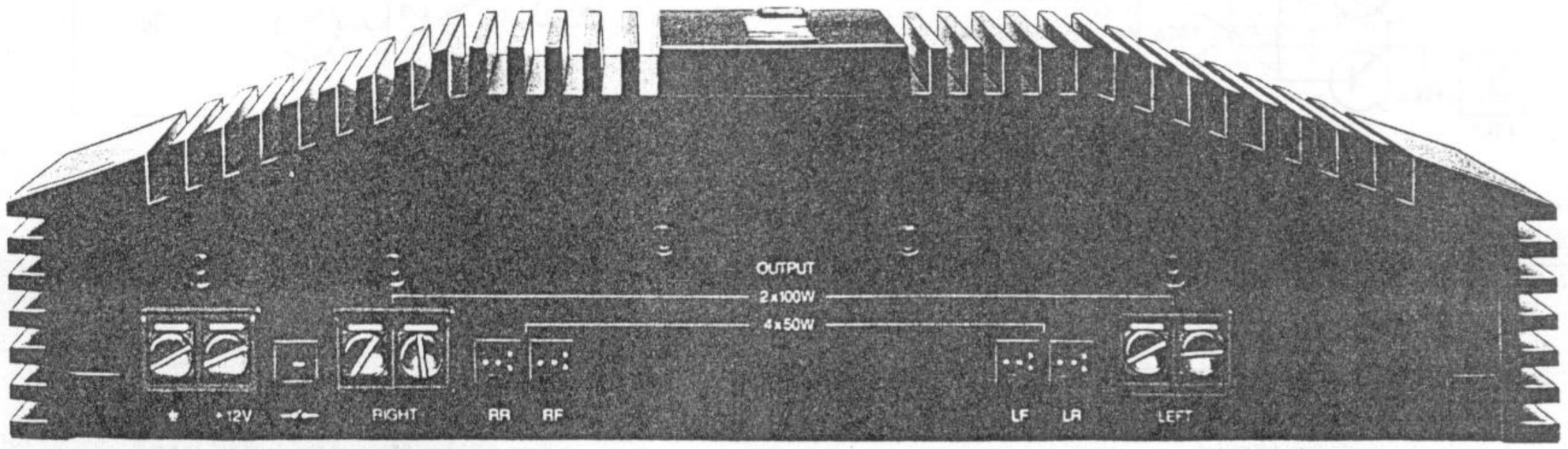

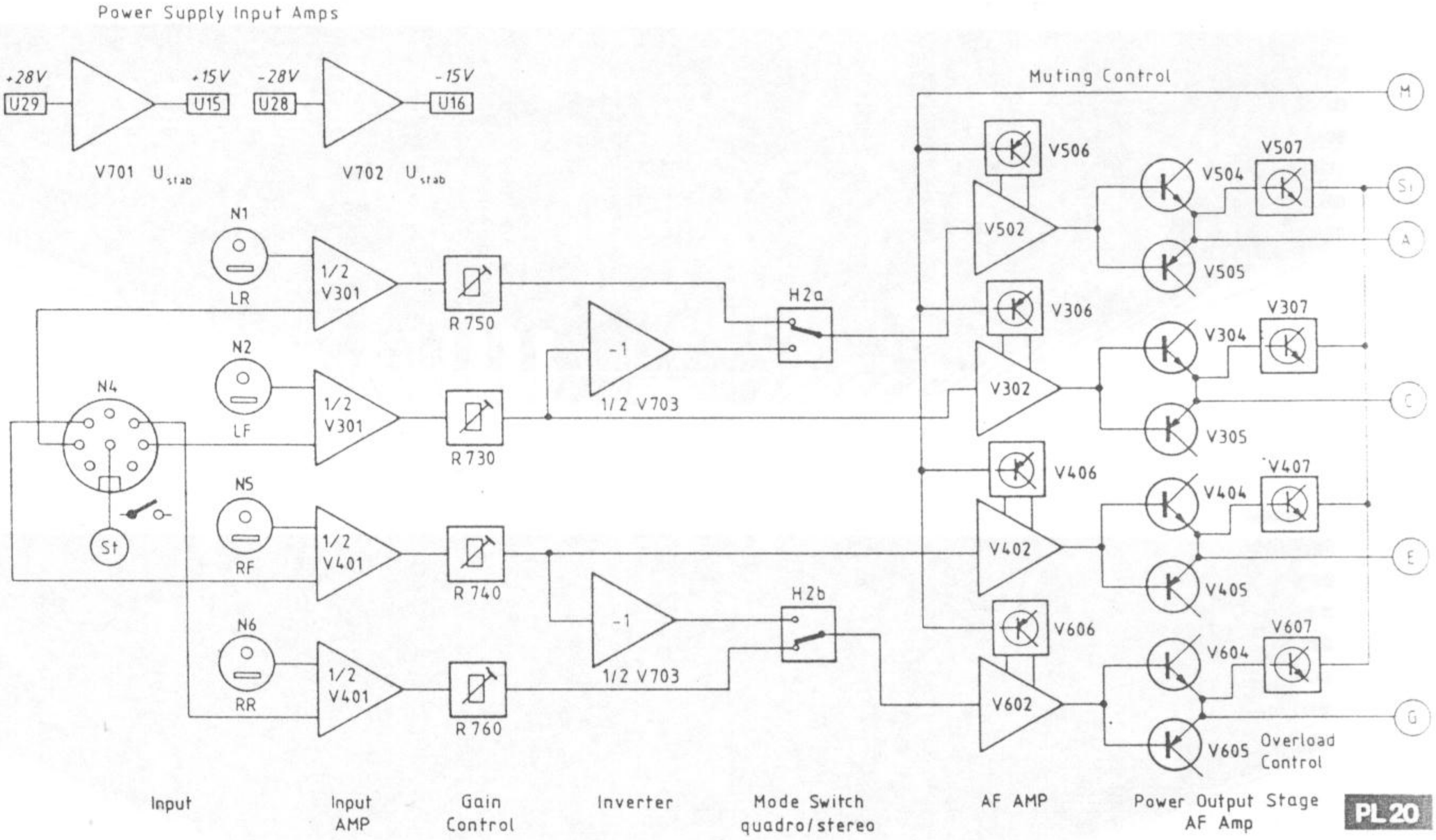
Power Supply Input Amps
+28V
U29
+15V
U15
-28V
U28
-15V
U16
V701 U stab
V702 U stab
Muting Control
M
V506
V507
V504
S1
V502
A
V505
N1
LR
1/2 V301
R 750
H2a
-1
V306
V307
V304
N2
LF
1/2 V301
R 730
1/2 V703
V302
C
V305
N4
St
V407
V406
V404
N5
RF
1/2 V401
R 740
V402
E
V405
H2b
-1
V606
V607
N6
RR
1/2 V401
R 760
1/2 V703
V604
V602
G
V605
Overload Control
Input
Input AMP
Gain Control
Inverter
Mode Switch quadro/stereo
AF AMP
Power Output Stage AF Amp
PL20

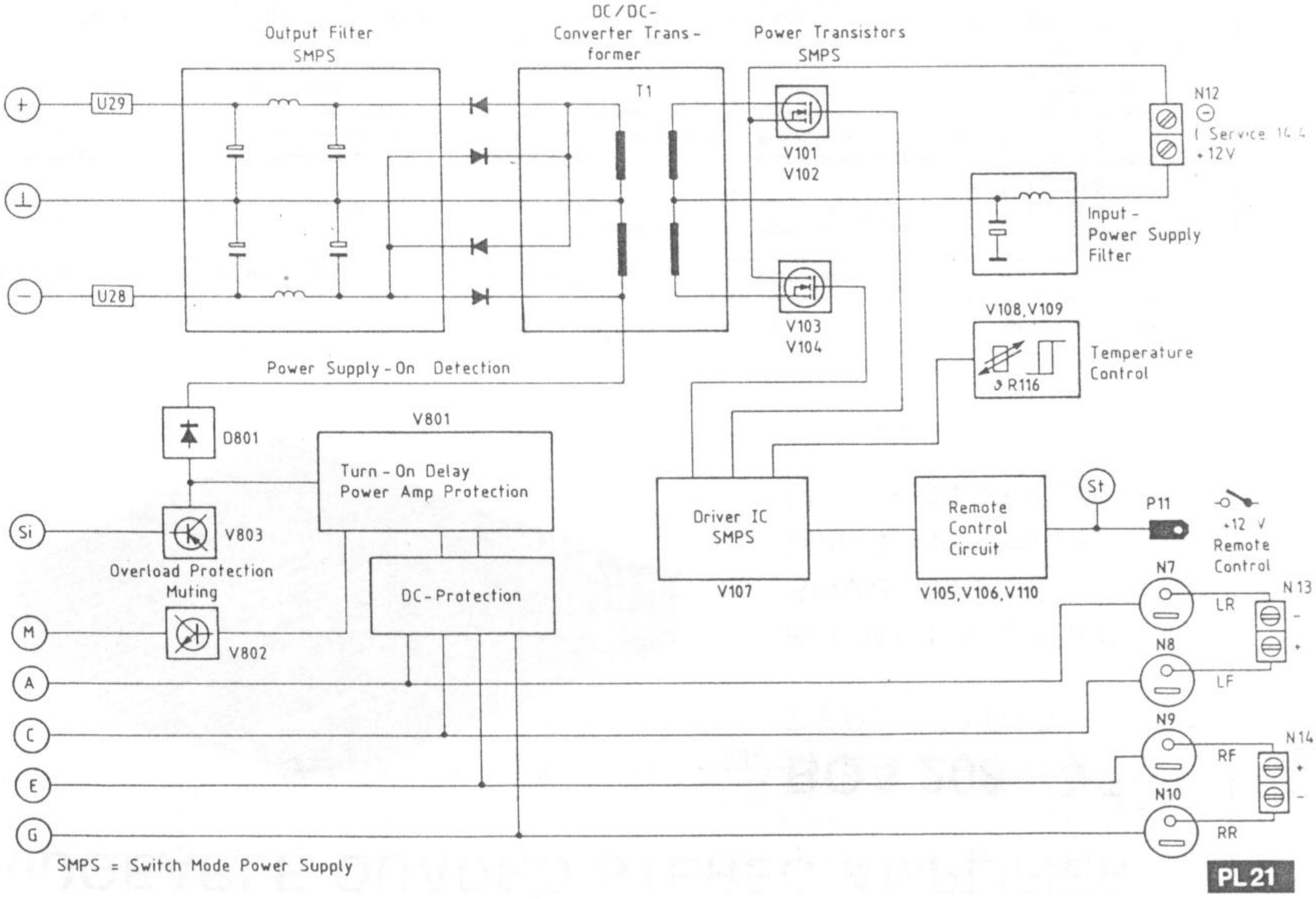
Output Filter SMPS
DC/DC-Converter Trans-former
T1
Power Transistors SMPS
+
U29
⊥
−
U28
V101
V102
V103
V104
N12
⊖
(Service 14.4)
+12V
Input-Power Supply Filter
V108,V109
Temperature Control
R116
Power Supply-On Detection
D801
V801
Turn-On Delay
Power Amp Protection
Si
V803
Overload Protection
Muting
M
V802
DC-Protection
Driver IC SMPS
V107
Remote Control Circuit
V105,V106,V110
St
P11
+12 V
Remote Control
N7
LR
N13
N8
LF
N9
RF
N14
N10
RR
A
C
E
G
SMPS = Switch Mode Power Supply
PL21

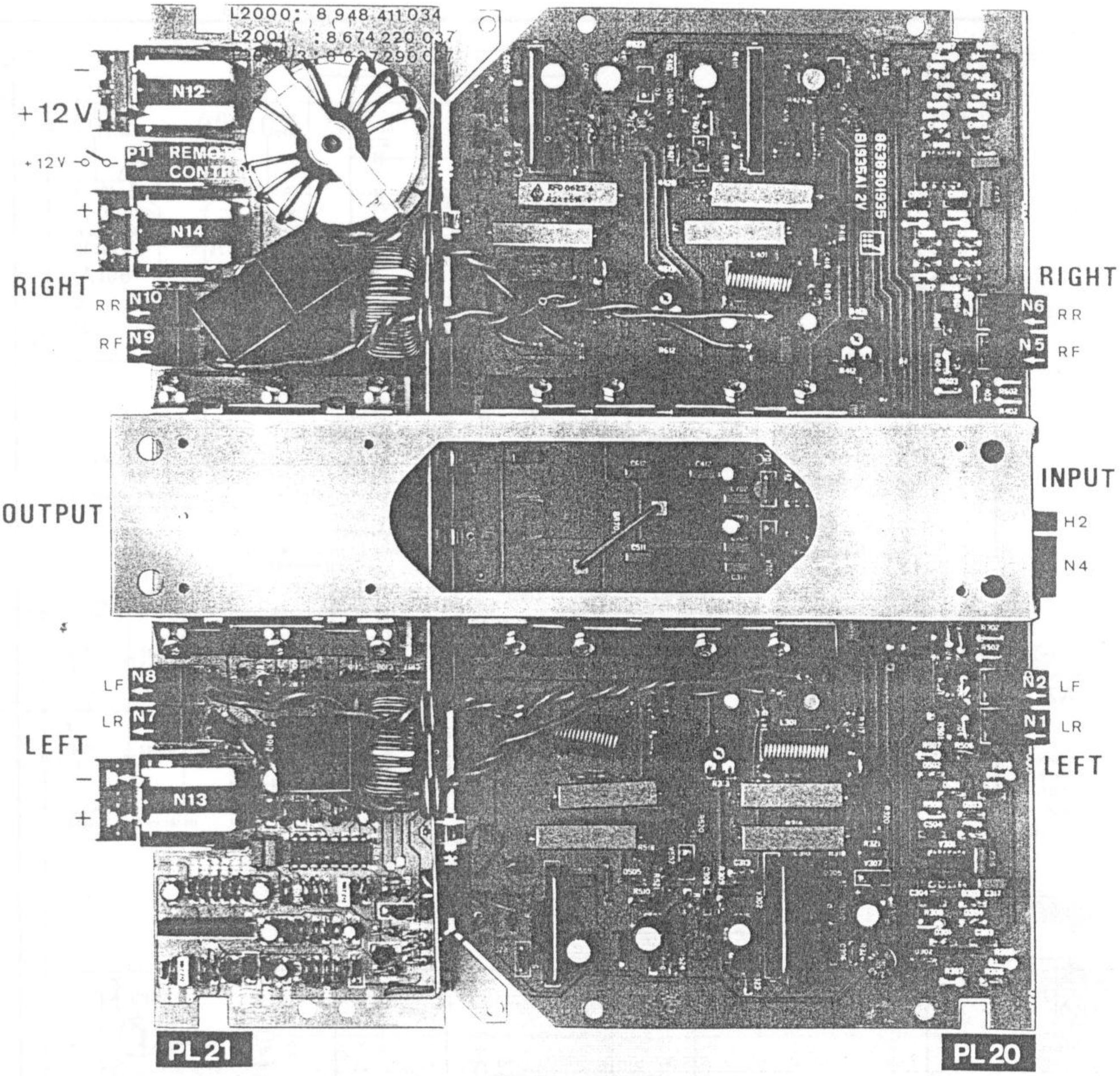
L2000 : 8 948 411 034
L2001 : 8 674 220 037
+12 V
N12
P11
REMOTE CONTROL
+12 V
+
N14
−
RIGHT
RR
N10
RF
N9
RIGHT
N6
RR
N5
RF
OUTPUT
INPUT
H2
N4
LF
N8
LR
N7
LEFT
−
+
N13
N2
LF
N1
LR
LEFT
PL 21
PL 20

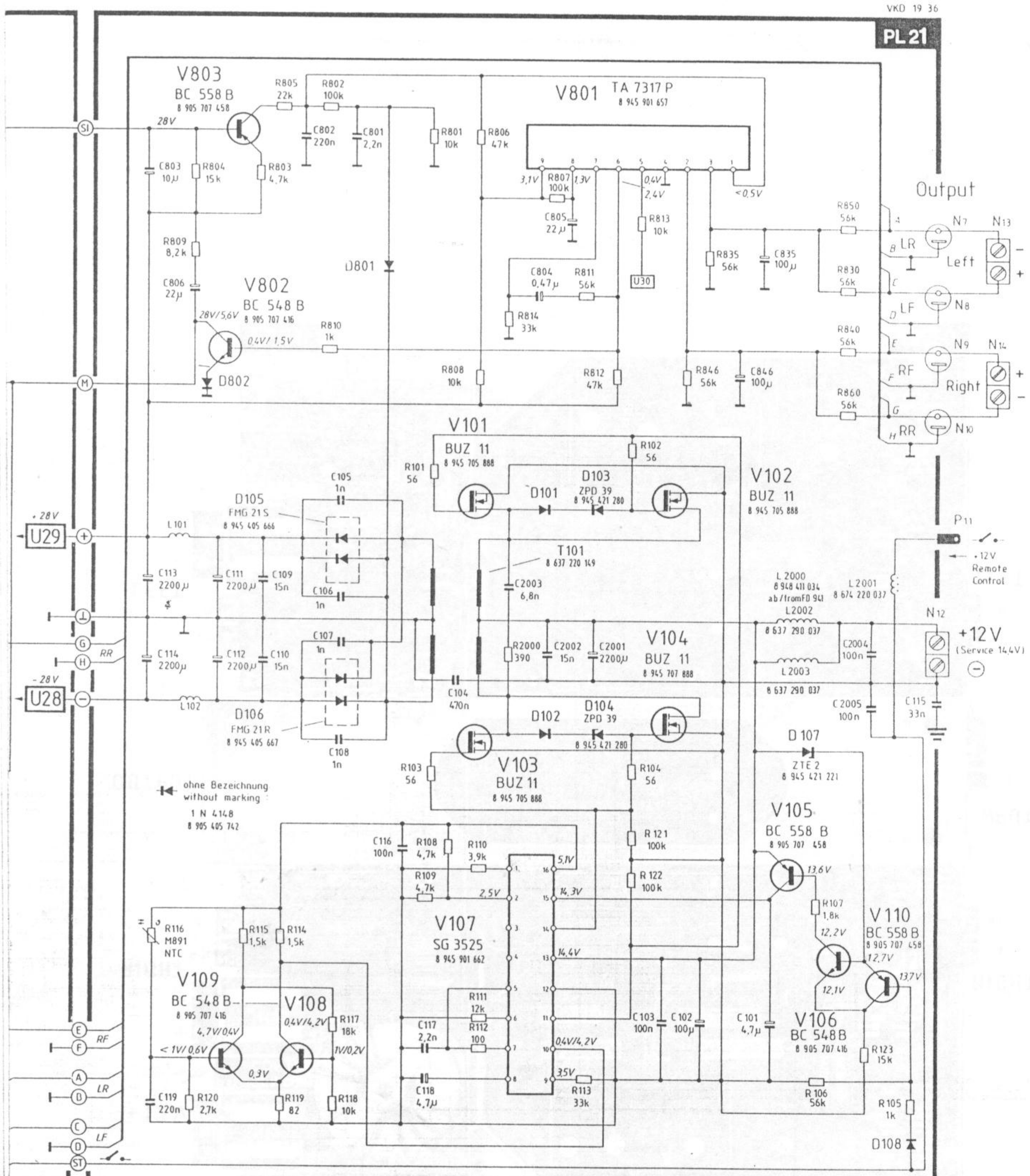

BRIDGEABLE QUADRO STEREO AMPLIFIER BQA 208 7 607 579 010

V703 ½

V703
LM 833 N
8 945 901 909

V703 ½

H2b

V506
BC 558C
8 905 707 459

V504
2 SC 2527
8 945 705 527

V507
BC 548 B
8 905 707 416

V503
BD 135-10
8 905 707 250

V505
2SA1077
8 945 707 526

V602
µ PC 1270
8 945 901 660

V606
BC 558 C
8 905 707 459

V604
2 SC 2527
8 945 705 527

V607
BC 548 B
8 905 707 416

V603
BD 135-10
8 905 705 250

V605
2SA1077
8 945 705 526

V306
BC 558 C
8 905 707 459

V304
2 SC 2527
8 945 705 527

V307
BC 548 B
8 905 707 416

V303
BD 135-10
8 905 707 250

V305
2SA1077
8 945 707 526

V402
µ PC 1270
8 945 901 660

V406
BC 558 C
8 905 707 459

V404
2 SC 2527
8 945 705 527

V407
BC 548 B
8 905 707 416

V403
BD 135-10
8 905 705 250

V405
2SA1077
8 945 705 526

LF

LR

BLAUPUNKT BRI

VKD 19 35

PL 20

Input

+28V U29 C701 10µ — 1 3 2 — +15V U15 — V701 MC 78 L 15 8 945 901 659 — C702 100n

-28V U28 C703 10µ — 2 3 1 — -15V U16 — V702 MC 79 L 15 8 945 901 658 — C704 100n

C503 4,7 — R505 56k — R504 47k — R503 27k

N1 LR — R501 8,2 — R502 15k — R506 3,3k — R507 2,7k — D501 D502 D504 D503 — V301½ -15V LR — R508 56k — C504 4,7

C303 4,7 — R305 56k — R303 27k — R304 47k

N2 LF — R301 8,2 — R302 15k — R306 3,3k — R307 2,7k — D301 D302 D304 D303 — V301½ LF 15V — R308 56k — C304 4,7

C120 2,2µ

RF LF RR LR — N4 — L2004 — C2006 100n

V301, LM 833 N
V401 8 945 901 909

ohne Bezeichnung / without marking: 1 N 4148 8 905 405 742

C403 4,7 — R405 56k — R403 27k — R404 47k

N5 RF — R401 8,2 — R402 15k — R406 3,3k — R407 2,7k — D401 D402 D404 D403 — V401½ -15V RF — R408 56k — C404 4,7

R603 4,7 — R605 56k — R603 27k — R604 47k

N6 RR — R601 8,2 — R602 15k — R606 3,3k — R607 2,7k — D601 D602 D604 D603 — V401½ RR 15V — R608 56k — C604 4,7

H2a

R731 5,6k — R732 2,7k — R733 5,6k

V506 BC 558C 8 905 707 459 — R523 1k — V504 2 SC 2527 8 945 705 527

R750 50k — C505 10 µ — R526 8,2k — R524 56k — C506 47 — R522 12k — C515 100µ — C509 100n

V502 µ PC 1270 8 945 901 660 — 22V — 28V — 0,6V — U28 -28V — LR — -0,5V — -0,6V — -1V — -26V

R510 1,8k — C507 100µ — R511 56k — C510 100n — R509 680k — C508 15 — R525 3,3k — R513 5k — R512 1k — C513 33n — R514 0,24

V503 BD 135-10 8 905 707 250

V306 BC 558 C 8 905 707 459 — R323 1k — V304 2 SC 2527 8 945 705 527

R730 50k — C305 10µ — R326 8,2k — R324 56k — C306 47 — R322 12k — C315 100µ — C309 100n

V302 µ PC 1270 8 945 901 660 — 22V — 28V — 0,6V — U28 -28V — LF — -0,5V — -0,6V — -1V — -26V

R310 1,8k — C307 100µ — R311 56k — C310 100n — R309 680k — C308 15 — R325 3,3k — R313 5k — R312 1k — C313 33n — R314 0,24

V303 BD 135-10 8 905 707 250

V803 BC 558 B 8 905 707 458

V801 TA 7317 P 8 945 901 657

V802 BC 548 B 8 905 707 416

V607 BC 548 B 8 905 707 416

V407 BC 548 B 8 905 707 416

V101 BUZ 11 8 945 705 888

V102 BUZ 11 8 945 705 888

V103 BUZ 11 8 945 705 888

V104 BUZ 11 8 945 707 888

V105 BC 558 B 8 905 707 458

V106 BC 548 B 8 905 707 416

V107 SG 3525 8 945 901 662

V108 BC 548 B 8 905 707 416

V109 BC 548 B 8 905 707 416

V110 BC 558 B 8 905 707 458

D105 FMG 21 S 8 945 405 666

D106 FMG 21 R 8 945 405 667

D103 ZPD 39 8 945 421 280

D104 ZPD 39 8 945 421 280

D107 ZTE 2 8 945 421 221

T101 8 637 220 149

L2000 8 948 411 034 ab/fromFD 941

L2001 8 674 220 037

L2002 8 637 290 037

L2003 8 637 290 037

ohne Bezeichnung
without marking
1 N 4148
8 905 405 742

Output

LR Left

LF N8

RF Right

RR N10

+12V (Service 14,4V)

+12V Remote Control

V703 ½
-15V
R731 5,6k
R732 2,7k
R733 5,6k
R734 6,8k
V703
LM 833 N
8 945 901 909
V703 ½
15V
R742 2,7k
R741 5,6k
R743 5,6k
R744 6,8k
H2b
V506
BC 558C
8 905 707 459
R523 1k
V504
2 SC 2527
8 945 705 527
V507
BC 548 B
8 905 707 416
C506 47
C515 100µ
C509 100n
C511 100n
U29
R522 12k
R520 150
R519 15k
9mV
22V
28V
0,6V
-28V
LR
R515 0,24
R521 1k
D505
R518 1,2k
C513 33n
-0,5V
-0,6V
R525 3,3k
R514 0,24
V505
2SA1077
8 945 707 526
R516 10
-1V
-26V
C508 15
R513 5k
L501
R527 1k
R517 10
R509 680k
V503
BD 135-10
8 905 707 250
R512 1k
U28
C512 100n
C514 33n
V606
BC 558 C
8 905 707 459
R623 1k
R760 50k
C605 10µ
V604
2 SC 2527
8 945 705 527
V607
BC 548 B
8 905 707 416
R626 8,2k
R624 56k
C606 47
C615 100µ
C609 100n
C611 100n
U29
R622 12k
R620 150
R619 15k
V602
µPC 1270
8 945 901 660
9mV
22V
28V
0,6V
R615 0,24
R621 1k
D605
R618 1,2k
R610 1,8k
U28
-28V
RR
C613 33n
-0,5V
-0,6V
C607 100µ
R625 3,3k
R614 0,24
V605
2SA1077
8 945 705 526
R616 10
-1V
-26V
C608 15
R613 5k
L601
R609 680k
C610 100n
V603
BD 135-10
8 945 705 250
R627 1k
R617 10
R611 56k
R612 1k
U28
C612 100n
C614 33n
+28V
U29
-28V
U28
V306
BC 558 C
8 905 707 459
R323 1k
V304
2 SC 2527
8 945 705 527
V307
BC 548 B
8 905 707 416
C306 47
C315 100µ
C309 100n
C311 100n
U29
R322 12k
R320 150
R319 15k
9mV
22V
28V
0,6V
-28V
LF
R315 0,24
R321 1k
D305
R318 1,2k
C313 33n
-0,5V
-0,6V
R325 3,3k
R314 0,24
V305
2SA1077
8 945 705 526
R316 10
-1V
-26V
C308 15
R313 5k
L301
R327 1k
R317 10
R309 680k
V303
BD 135-10
8 905 707 250
R312 1k
U28
C312 100n
C314 33n
V406
BC 558 C
8 905 707 459
R423 1k
R740 50k
C405 10µ
V404
2 SC 2527
8 945 705 527
R709 330k
U29
R426 8,2k
R424 56k
C406 47
C415 100µ
C409 100n
C411 100n
R422 12k
R420 150
R419 15k
V402
µPC 1270
8 945 901 660
9mV
22V
28V
0,6V
R415 0,24
R421 1k
D405
R418 1,2k
R410 1,8k
U28
-28V
RF
C413 33n
-0,5V
-0,6V
C407 100µ
R425 3,3k
R414 0,24
V405
2SA1077
8 945 705 526
R416 10
-1V
-26V
C408 15
R413 5k
L401
R409 680k
C410 100n
V403
BD 135-10
8 945 705 250
R427 1k
R417 10
R411 56k
R412 1k
U28
C412 100n
C410 33n
LF
LR
A
B
D
ST
BLAUPUNKT BRID

BLOCK DIAGRAM

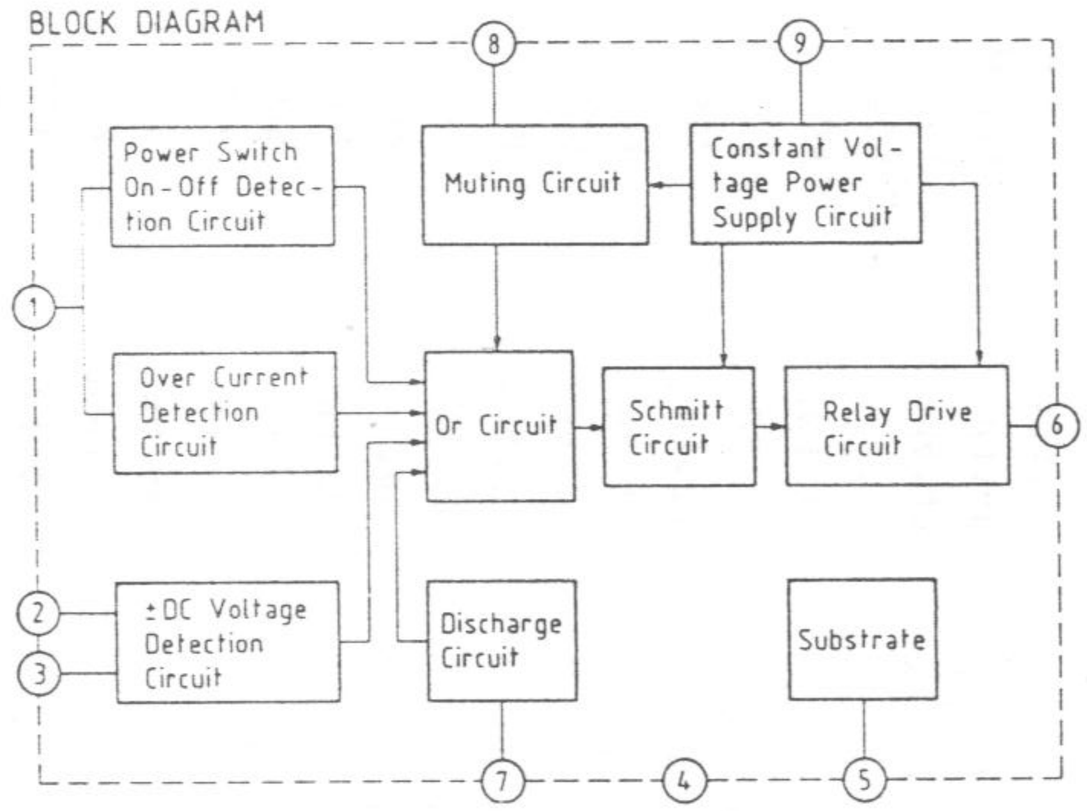

V801

(PL21)

BLOCK DIAGRAM

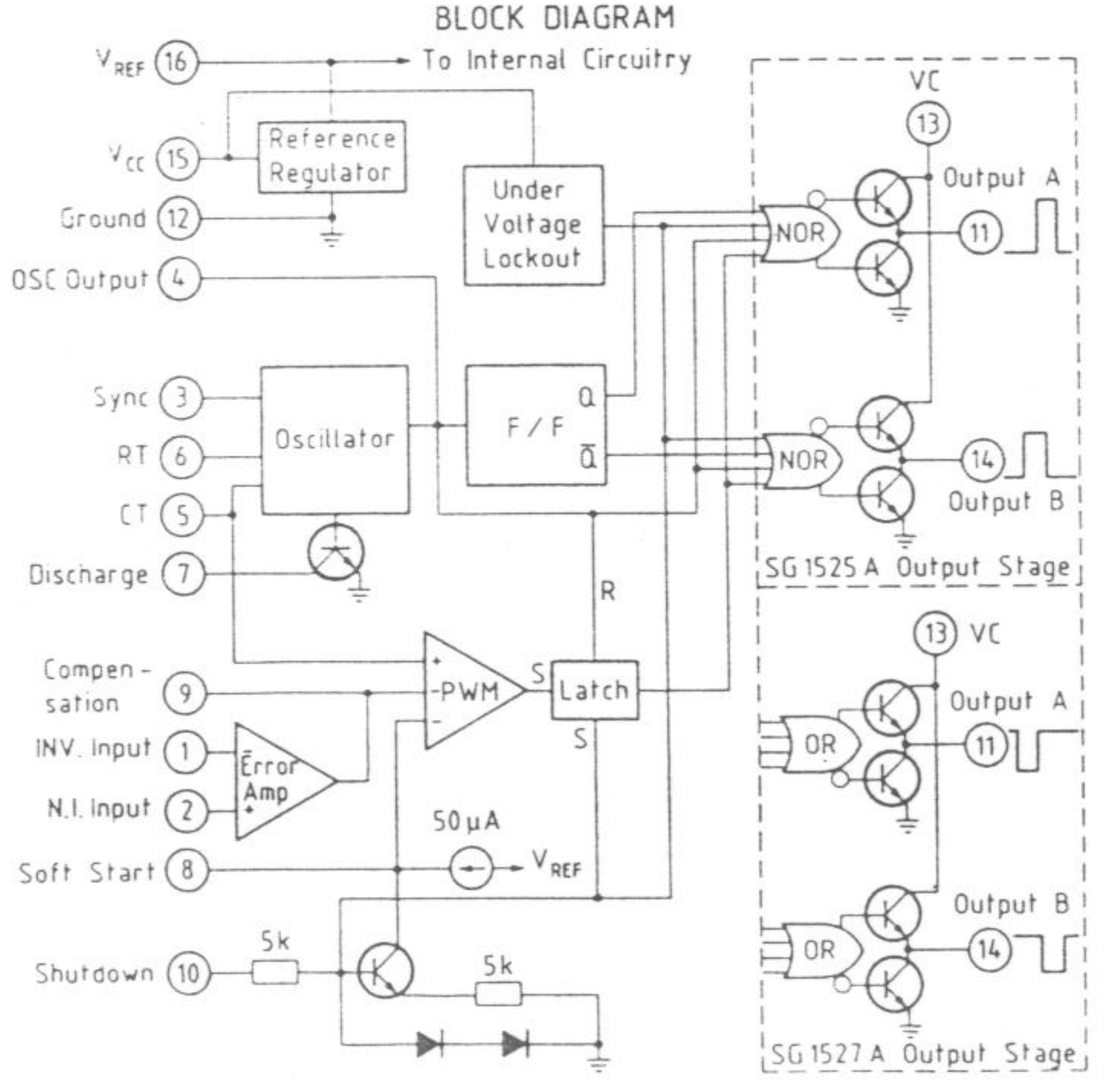

V107

(PL21)